REVISION HISTORY			
REV.	DESCRIPTION	DATE	DRAWN BY
1	ORIGINAL PRINT	6/11/2021	E. SCIME
2	ADDED ADDITIONAL PICOBOX HOLES	8/3/2021	E. SCIME
3	REVISED FLANGE GEOMETRY	9/17/2021	N. MASSOUDA

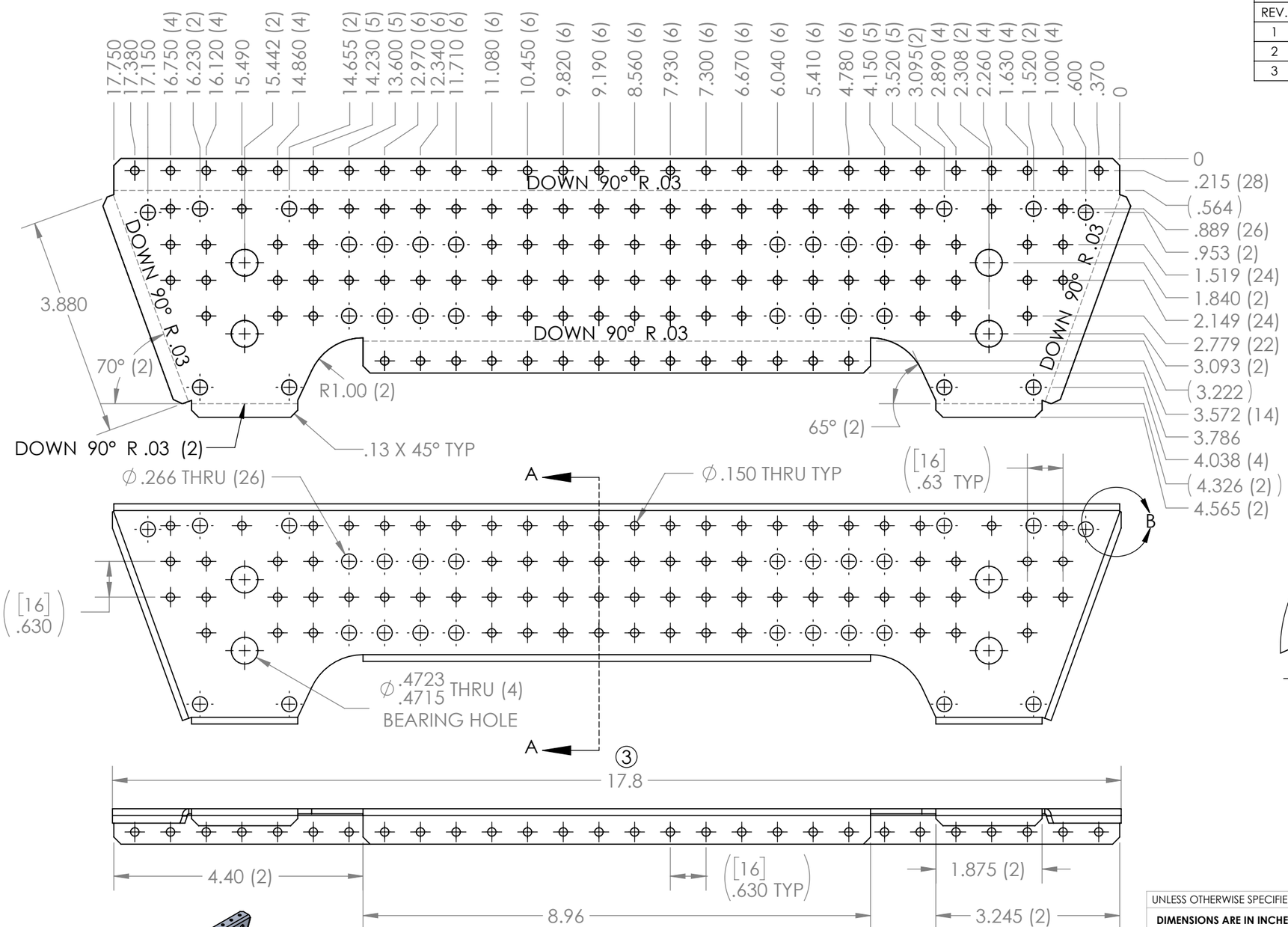

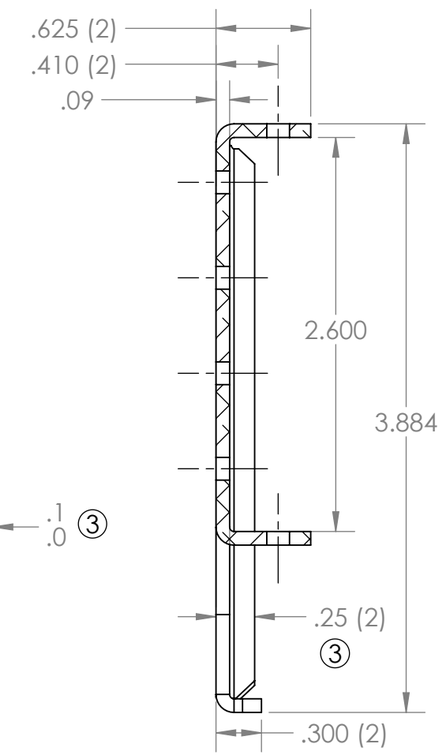

SECTION A-A
SCALE 1 : 1

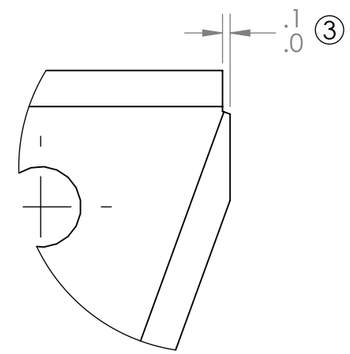

DETAIL B
SCALE 2 : 1

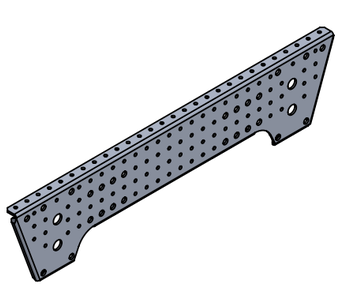

*** SEE CAD FOR ADDITIONAL TOOLPATH INFO***

UNLESS OTHERWISE SPECIFIED:	COMMENTS:		AndyMark
DIMENSIONS ARE IN INCHES	DUAL DIMENSIONS ARE IN MILLIMETERS.		TITLE:
TOLERANCES: FRACTIONAL ±1/16; ANGULAR: MACH ±1°; ANGULAR: BEND ±5°; ONE PLACE DECIMAL ±0.1; TWO PLACE DECIMAL ±0.01; THREE PLACE DECIMAL ±0.005; FOUR PLACE DECIMAL ±0.0005	BREAK ALL SHARP EDGES.		TILERISER PLATE
MATERIAL 5052 AL		NAME / DATE	SIZE B / DWG. NO. am-4614 / REV 3
FINISH DEBURRED	CHECKED	NL / 9/20/21	
	ENG APPR.		
	MFG APPR.		
DO NOT SCALE DRAWING	Q.A.		SCALE: 1:2 / SHEET 1 OF 1